A MARK OF KEC QUALITY

KUMAR
ENGINEERING INDIA PVT. LTD.
AN ISO 9001 : 2015 CERTIFIED COMPANY

"EXTRA ORDINARY EXPECTATIONS MET WITH ABSOLUTE SATISFACTION"

CE

MAKE IN INDIA

- » First to Introduce Sanding Machines in India.
- » Best Technology at Affordable Price.
- » Persistent Efforts on Balancing Between Production Cost, Speed & Quality.
- » Always Enthusiastic to Deliver Best Product & Services.
- » Greatly Honoured by 800+ Prestigious Plywood Brands.
- » One Amongst the Proud Indian Companies Incorporating Global Technology.
- » Imbibing the True Spirit of "MAKE IN INDIA" Initiative.

www.kumarengineeringco.in

KUMAR
ENGINEERING INDIA PVT. LTD.
AN ISO 9001 : 2015 CERTIFIED COMPANY

"Our mission is to provide most innovative, technologically advanced and energy-efficient solutions for a better tomorrow."

PROFILE

Kumar Engineering Co., an ISO 9001: 2015 certified organization, has a culture of embracing technical challenges. It keeps upgrading with new innovations and makes all efforts to be on par with World Class Design Skills.

With all our earned knowledge and experience, we have developed many complicated Machines entirely "Made in India" and have been honoured with prestigious appreciation in all around Indian Plywood and Laminate Industries.

We have introduced high-tech Sanding Machines first time in India, with all similar challenging features as in World's Leading European Brands.

OUR MACHINES HAVE SHOWN FOLLOWING VERSATILE QUALITIES

- The Best Result Oriented
- Highest Production Performance
- Energy Efficient
- User Friendly
- Highly Economical
- Environment Friendly
- Negligible Maintenance Cost
- True Value For Money

OUR MISSION

- Finding technological, automated, environment-friendly and smart solution for the needs of plywood, Laminate, MDF and particle board sector.
- Branding a great satisfaction level in the customers through after-sales services

OUR VISION

- Building a diversified business portfolio in different industrial sectors .
- Creating a strong and long-term relationship with our associates.
- Striving towards quality improvement and innovation in our daily work.

TECHNICAL & SERVICE SUPPORT

Our dedicated service & support team is committed to deliver timely response & solutions to the queries raised.

Please call us at 88262 98005

WORLD CLASS TECHNOLOGY & MANUFACTURING

KUMAR
ENGINEERING INDIA PVT. LTD.
AN ISO 9001 : 2015 CERTIFIED COMPANY

The designs of the machines are such that there is an easy accessibility to different maintenance zones, which eventually brings down the maintenance time. Every Component developed with well thought engineering, highest safety factor and longest performing characteristic.

We do our work systematically, passionately and agilely. The Customer Satisfaction is our utmost priority, and we always strive to bring out the best technical solutions for following machines of Plywood and Laminate Industries

- Wide Belt Sanding Machines For Plywood / Veneer
- Wide Belt Sanding Machines For Doors
- Sanding Machines With Cross Belt For Furnitures
- Profile Sanding Machine for Doors & Furnitures
- Calibrating Machines For Plywood
- Automatic DD Saw For Plywood
- High Pressure Laminate Sanding Machines
- Pneumatic Glue Spreader 8' and 4'
- Auto Loading & Auto Stacking System
- Core Composing Machines
- MDF 3 Stage Calibrating and Sanding Line.

And soon adding many new Machines for manpower reductions.

We see India as a potential, fast-growing market for the Plywood Industry and it needs to be incorporated with latest Machines to keep high quality in low cost. We present our participation to create a technical partner gesture.

The economical solutions under the leadership of our Company Founder, is providing a catalyst to the Domestic as well as International market and we strongly believe to be a pride pioneer in this field.

2,00,000
Sq. Ft.
Shop Floor Area

1000+
Machines &
Equipments
Installed

800+
Happy
Customers

200+
Dedicated
Team

DOUBLE HEAD WIDE BELT SANDING MACHINE - TOP

KUMAR ENGINEERING INDIA PVT. LTD.
AN ISO 9001 : 2015 CERTIFIED COMPANY

MODEL : ZEDSAN 4126 DS

This Model is the best Sanding Machine for Commercial and Decorative Plywood Industry, as excellent sanding results are achieved with Servo Controlled Floating Roller Technology .

Specific features of this machine are -

» Perfect Sanding on Uneven Thickness
» Highly Glossy Sanding Results
» Fast production
» Changeable Results by easy configurations setting.

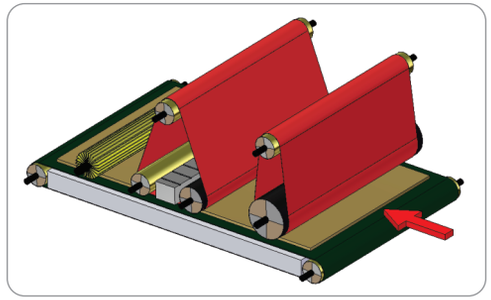

It is useful for -

A. Commercial Sanding
B. Veneer Sanding
C. MR Sanding
D. Flush Doors

SPECIFICATIONS

Working Thickness	Working Width	No. of Heads	Heads Configuration	Top - Head 1	Top - Head 2	Sanding Belt Size	Feeding Speed	Feed Motor	Brush Motor	Vertical Motion Motor	Total Power	Weight	Dimensions (W X L X H)
2-100 mm	200-1250 mm	Two	R-R/P	Sanding with Rubber Roller - 25 HP (18.64 KW)	Polishing with Sanding Pad - 20 HP (15 KW)	2620 x 1350 mm	5-40 mpm	5 HP (3.7 KW)	1 HP (0.75 KW)	0.5 HP (0.37 KW)	51.5 HP (38.4 KW)	3950 Kg	2240 x 2500 x 2300 mm

DOUBLE HEAD WIDE BELT SANDING MACHINE - BOTTOM

KUMAR ENGINEERING INDIA PVT. LTD.
AN ISO 9001 : 2015 CERTIFIED COMPANY

MODEL : ZEDSAN 4126 BS

Bottom Sanding Machine was introduced to cover higher-production with hassle free movement. This machine eliminated all troubles and wastage during filting and bring back for reverse sanding

This Machine has following features -

» Used in synchronization with Top Sanding Machine
» Perfect Sanding Results on Uneven Thickness
» Highly Glossy Sanding Results, as in Top Sanding Machine
» Fast production, as Both Side Sanding is achieved in one pass
» Changeable Results, by easy configuration settings.

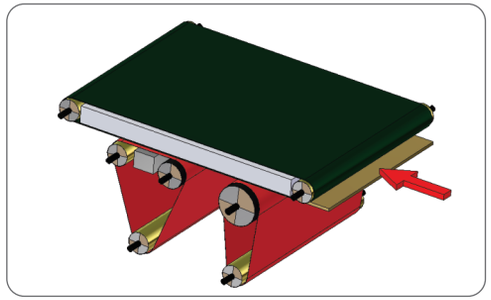

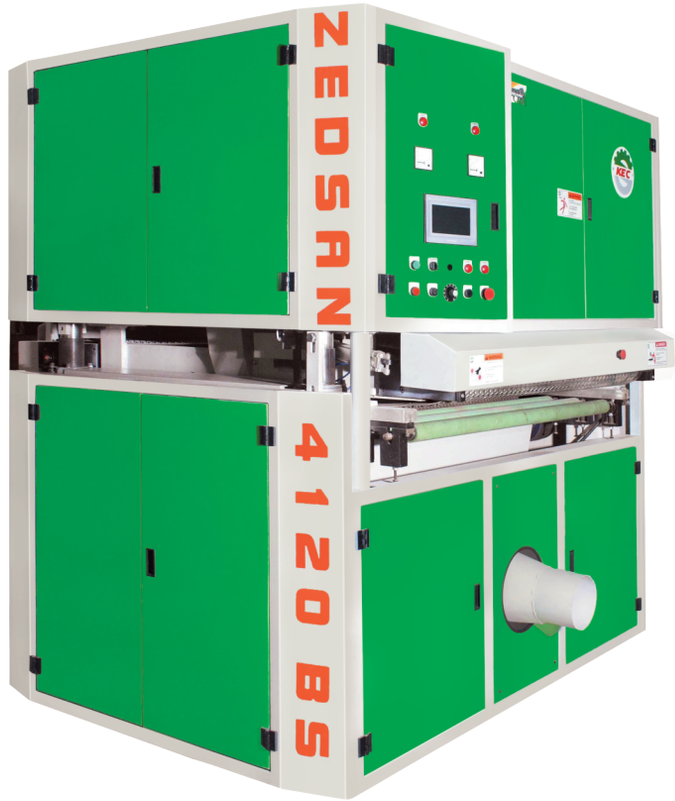

Very useful for -

A. Along the Top Sanding Machine to meet high production
B. Commercial Sanding
C. Veneer Sanding
D. MR Sanding
E. Veneer Faced Flush Doors

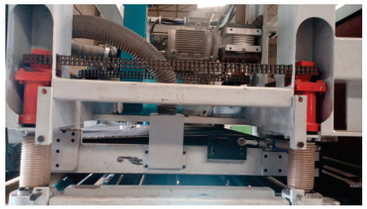

SPECIFICATIONS

Working Thickness	Working Width	No. Of Heads	Heads Configuration	Bottom - Head 1	Bottom - Head 2	Sanding Belt Size	Feeding Speed	Feed Motor	Vacuum Blower Motor	Vertical Motion Motor	Total Power	Weight	Dimensions (W X L X H)
2-100 mm	200-1250 mm	Two	R-R/P	Sanding with Rubber Roller - 25 HP (18.64 KW)	Polishing with Sanding Pad - 20 HP (15 KW)	2620 x 1350 mm	5-40 mpm	5 HP (3.7 KW)	5 HP (3.7 KW)	2 HP (1.5 KW)	57 HP (42.5 KW)	4200 Kg	2250 x 2100 x 2600 mm

HEAVY DUTY BOTH SIDE SANDING MACHINE

KUMAR ENGINEERING INDIA PVT. LTD.
AN ISO 9001 : 2015 CERTIFIED COMPANY

MODEL : ZEDSAN 3426 TBS

The combination of Top Sanding and Bottom Sanding in one machine was a very big challenge, as there was a need of creating same high sanding results with user-friendly and easy maintenance specialty. After a rigorous R&D, our team finally achieved the success.

Controlled by one operator, this machine provides very high class high sanding results on both side with a high output rate of 10 to 14 sheets per minute. Adding Auto Loading & Stacking System saves huge labour cost.

This machine is useful for -

- Every plywood industry with 2 or more Hot Presses
- High shine on both sides
- All sizes of commercial plywood
- All Veneer/Decorative Sanding
- MR Sanding

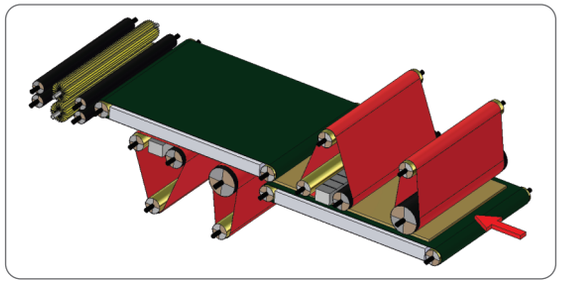

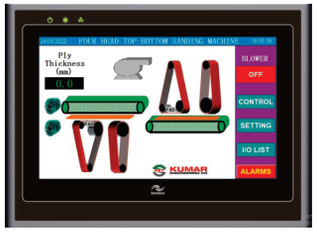

SPECIFICATIONS

Working Thickness	Working Width	No. of Heads	Heads Configuration	Top & Bottom - Head 1	Top & Bottom - Head 2	Sanding Belt Size	Brush Motor	Feeding Speed	Feed Motor	Vacuum Blower Motor	Vertical Motion Motor	Total Power	Weight	Dimensions (W X L X H)
2-200 mm	200-1250 mm	Four	R-R/P : R-R/P	Sanding with Rubber Roller - 25 HP (18.64 KW) x 2 No	Polishing with Sanding Pad - 20 HP (15 KW) x 2 No.	2620 x 1350 mm	1 HP	5 HP X 2 5-40 mpm	Brush Motor 2 HP x 2 No.	5 HP	3 HP	113 HP	12000 Kg	3350 x 2250 x 2700 mm

TRIPLE HEAD CALIBRATING AND SANDING MACHINE

KUMAR ENGINEERING INDIA PVT. LTD.
AN ISO 9001 : 2015 CERTIFIED COMPANY

MODEL : ZEDSAN 5326 TCS

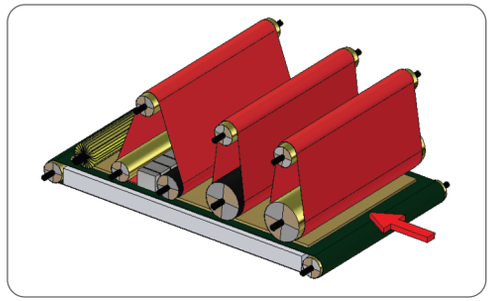

Triple Head Sanding Machine is developed by combining the application of Calibration and Sanding in a single machine, especially for those Plywood Units which have 2 to 4 Presses, and have plan to make 100% calibrated ply or have the plan for partial production of Calibrated Ply.

Three Heads of this machine are designed in such a way that the first head is used for Calibration, second head for Sanding and third head for Polishing. While Calibration, 1st Head is operational, and while Sanding, the second and third head is operational.

This machine is a complete solution for making Calibrated Ply with ultimate sanding results.

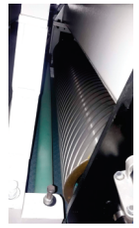

SPECIFICATIONS

Working Thickness	Working Width	No. of Heads	Heads Configuration	Top - Head 1	Top - Head 2	Top - Head 3	Sanding Belt Size	Feeding Speed	Feed Motor	Brush Motor	Vertical Motion Motor	Total Power	Weight	Dimensions (W X L X H)
2-100 mm	200-1250 mm	Three	R-R-R/P	Calibration with Steel Roller - 40 HP (30 KW)	Sanding with Rubber Roller - 25 HP (18.64 KW)	Polishing with Sanding Pad - 20 HP (15 KW)	2620 x 1350 mm	5-40 mpm	5 HP (3.7 KW)	1 HP (0.75KW)	1 HP (0.75 KW)	92 HP (68.6 KW)	5700 Kg	2240 x 3100 x 2300 mm

KUMAR
ENGINEERING INDIA PVT. LTD.
AN ISO 9001 : 2015 CERTIFIED COMPANY

MODEL : ZEDSAN 3426 CS

This Model is specially designed for Veneer Faced Flush Door Units and small Plywood Units. Combination of Roller and Pad makes this machine very useful, while keeping the machine as well as operational cost low.

This Machine provide different sanding results by different settings -

» Sanding by only Rollers
» Sanding by only Air Cushioned Pad
» Sanding by both

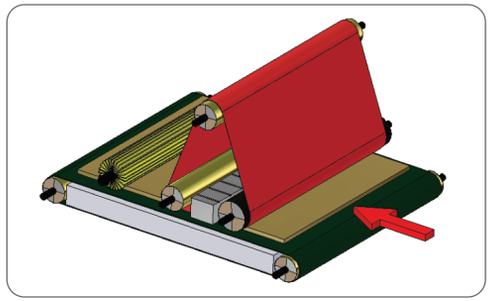

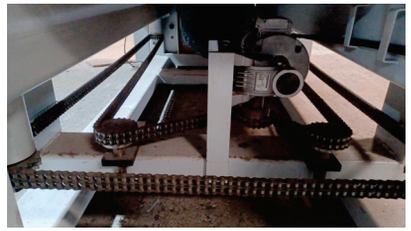

SPECIFICATIONS

Working Thickness	Working Width	No. of Heads	Heads Configuration	TOP - Head 1	Sanding Belt Size	Feeding Speed	Feed Motor	Brush Motor	Vertical Motion Motor	Total Power	Weight	Dimensions (W X L X H)
2-100 mm	200-1250 mm	One	R/P	Sanding + Polishing with Sanding Pad - 20 HP (18.64 KW)	2620 x 1350 mm	5-40 mpm	3 HP (2.2 KW)	1 HP (0.75 KW)	0.5 HP (0.37 KW)	24.5 HP (22 KW)	2800 Kg	2240 x 2150 x 2200 mm

KUMAR
ENGINEERING INDIA PVT. LTD.
AN ISO 9001 : 2015 CERTIFIED COMPANY

MODEL : ZEDSAN CAL 290

Single Head Calibrating Machine is developed to produce the uniform thickness ply, with possibly the lowest thickness variation in between 0.05 to 0.15 mm.

We, as an innovating company in this field, created an ultimate design in Calibrating Machine with combinations of unique features, such as -

- Highly Accurate Calibration
- Good Speed of Production
- Lowest Electricity Consumption
- High No. of Sheet Output per Sanding Belt
- User Friendly in Maintenance
- Smooth Production

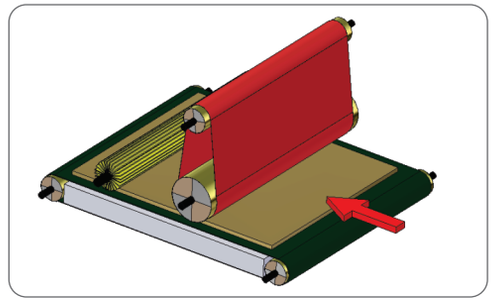

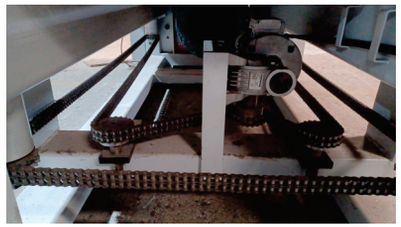

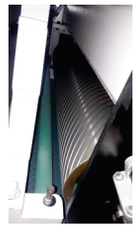

SPECIFICATIONS

Working Thickness	Working Width	No. of Heads	Heads Configuration	Top - Head 1	Sanding Belt Size	Feeding Speed	Feed Motor	Brush Motor	Vertical Motion Motor	Total Power	Weight	Dimensions (W X L X H)
2-100 mm	200-1250 mm	One	R	Calibration with Steel Roller - 50 HP (37 KW)	2620 x 1350 mm	5-30 mpm	5 HP (3.7 KW)	1 HP (0.75 KW)	0.5 HP (0.37 KW)	56.5 HP (42 KW)	3500 Kg	2240 X 2150 X 2300 mm

KUMAR
ENGINEERING INDIA PVT. LTD.
AN ISO 9001 : 2015 CERTIFIED COMPANY

MODEL : ZEDWOOD 1050 CS

This Machine is introduced for solid wood furniture producing Industries. The Machine provides uniform wood thickness and high shining in one pass.

The Cutter Roller brings all thickness variations in one set value by applying minimum quantum of power. Sanding Belt application on second head converts the job into fine, smooth look.

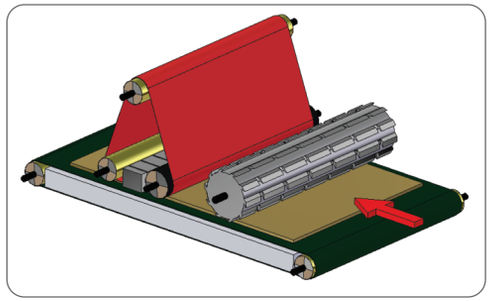

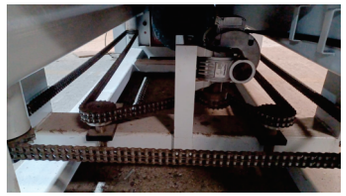

SPECIFICATIONS

Working Thickness	Working Width	No. of Heads	Heads Configuration	Top - Head 1	Top - Head 2	Sanding Belt Size	Feeding Speed	Feed Motor	Vertical Motion Motor	Total Power	Weight	Dimensions (W X L X H)
4-125 mm	150-1250 mm	Two	Cutter - R/P	Cutting with Cutter Roller - 15 HP (11 KW)	Sanding + Polishing with Sanding Pad - 15 HP (11 KW)	2620 x 1330 mm	5-40 mpm	3 HP (2.2 KW)	0.5 HP (0.37 KW)	33.5 HP (25 KW)	3400 Kg	1840 x 1850 x 1850 mm

HEAVY DUTY BOTH SIDE CALIBRATING MACHINE

KUMAR
ENGINEERING INDIA PVT. LTD.
AN ISO 9001 : 2015 CERTIFIED COMPANY

MODEL : ZED-HDC-350

The Calibrator for high accuracy with high speed needs an extra heavy structure and an excellent engineering Design. The precision in calibration becomes much complicated while doing both side in one go with the thickness variation between 0.05 to 0.15 mm.

A challenge-accepting culture has taken us to another prestigious status of introducing the First- In-India of such versatile and highly precise Calibrating Machine.

This Calibrator is a must need for producing the best quality to become listed amongst Esteemed Calibrated Plywood Manufacturing Companies.

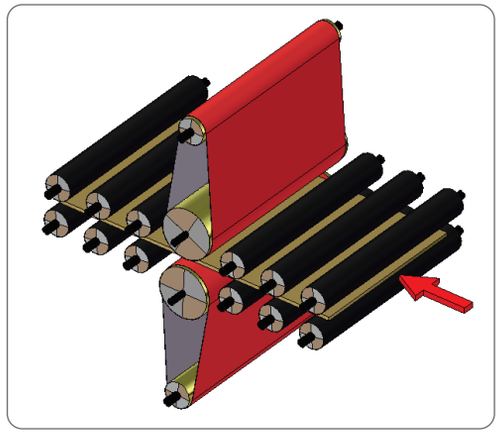

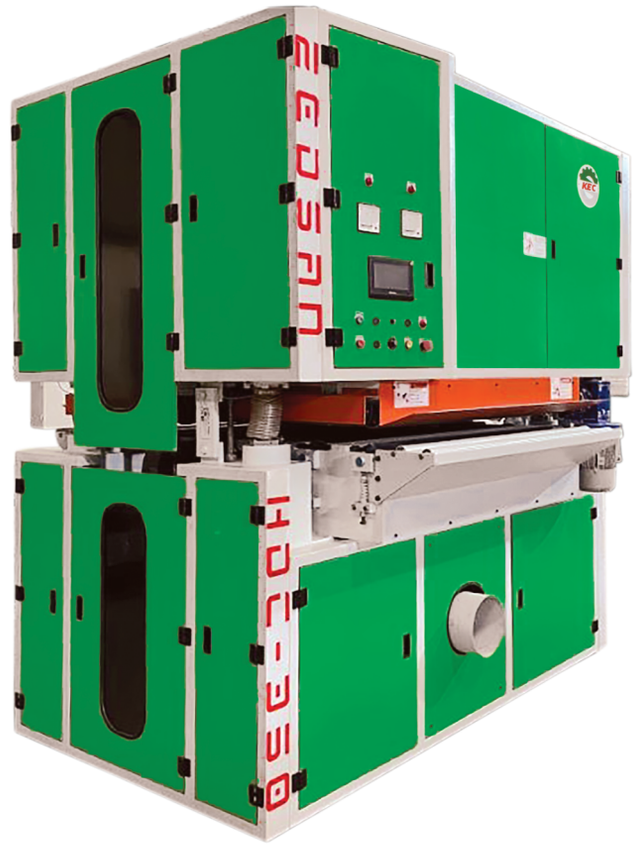

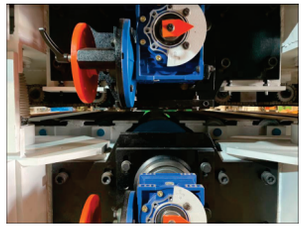

SPECIFICATIONS

Working Thickness	Working Width	No. of Heads	Heads Configuration	Top & Bottom - Head 1	Sanding Belt Size	Feeding Speed	Roller Conveyor Motor	Vertical Motion Motor	Brush Motor	Total Power	Weight	Dimensions (W X L X H)
4-100 mm	200-1250 mm	Two	R : R	Calibration with Steel Roller - 60-100 HP (45 KW) x 2 No.	2620 x1350 mm	5-30 mpm	10 HP (7.5 KW)	3 HP (2.2 KW)	2 HP (1.5 KW) x 2 Nos.	137-177 HP (102.5-132 KW)	15000 Kg 11.5 - 15 Ton	2440 x 1500 x 2850 mm

HEAVY DUTY BOTH SIDE CALIBRATING & SANDING MACHINE

KUMAR
ENGINEERING INDIA PVT. LTD.
AN ISO 9001 : 2015 CERTIFIED COMPANY

MODEL : ZED-HDCS - 350/275

This Machine is developed by adding additional Sanding feature in existing Model of Calibrating Machine as there was long time awaited such dual-purpose Machine.

As already being used by several Plywood Industries, this model is perfectly observed for future compliance and revolutionized Plywood Manufacturing Process by eliminating the need of Face Veneer on Calibrated Mat Ply thus saving enormous amount of Time, Energy & Cost.

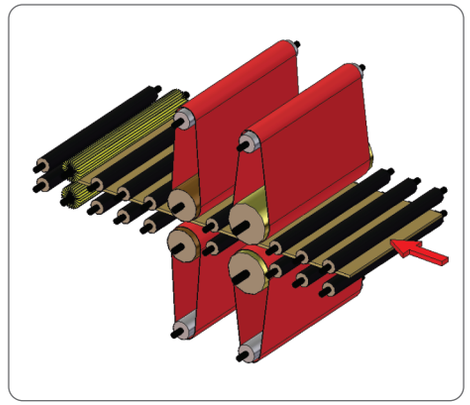

This is designed with selectable feature for -

*Calibration
*Sanding
*Calibration With Sanding.

This Machine is also featured with Human-less operation by adding Auto Loading System and Auto Stacking System.

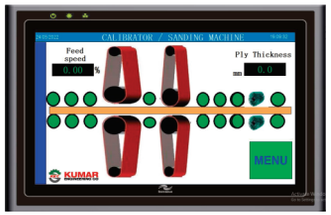

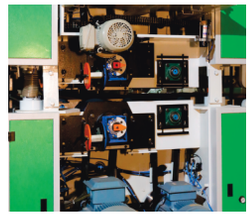

SPECIFICATIONS

Working Thickness	Working Width	No. of Heads	Heads Configuration	Top & Bottom - Head 1	Top & Bottom - Head 2	Sanding Belt Size	Feeding Speed	Conveyor Motor	Vertical Motion Motor	Brush Motor	Total Power	Weight	Dimensions (W X L X H)
4-100 mm	200-1250 mm	Four	R : R / R : R	Calibration with Steel Roller - 60-100 HP (45 KW) x 2 No.	Sanding with Rubber Roller - 25 HP (18.5 KW) x 2 No.	2620 x1350 mm	5-30 mpm	10 HP (7.5 KW) x 2 Nos.	3 HP (2.2 KW)	2 HP (1.25 KW) x 2 Nos.	187-227 HP (140 KW)	14000 Kg 14-16 Ton	2440 x 1500 x 2850 mm

KUMAR
ENGINEERING INDIA PVT. LTD.
AN ISO 9001 : 2015 CERTIFIED COMPANY

MODEL : ZED SAN 5326 TCS - CB

We developed the Sanding Machine with Cross Belt for Furniture industry where across the grain Sanding is essential along with longitudinal Wide Belts Heads for Pre Seal Sanding, Post Seal Sanding.

Ultra-fine Sanding with extra high Grit Sanding Belt run with Chevron Belt underneath and controlled by Electronic Segmented Pad.

This Machine is also usable for long Panels where narrow direction grains need perfect Sanding and also widely used for Veneer Tape removal application.

In general the Cross Belt Mechanism is designed to fix at out feed of the Machine to ensure final finishing touch on the scratches created by other Sanding Belts.

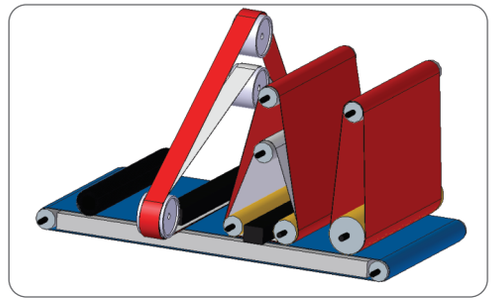

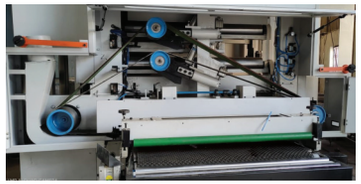

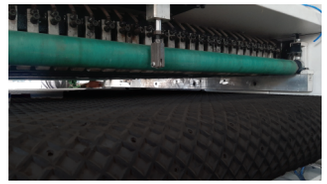

SPECIFICATIONS

Working Thickness	Working Width	No. of Heads	Heads Configuration	Head 1	Head 2	Head 3	Sanding Belt Size	Feeding Speed	Feed Motor	Brush Motor	Vertical Motion Motor	Total Power	Weight	Dimensions (W X L X H)
2-100 mm	100-1250 mm	Three	R + RP + CB	Sanding with Rubber Roller - 15 HP (80.5 KW)	Soft Rubber Contact Roller & Segment Pad 20 HP (18.64 KW)	Soft Rubber & Segment Pad 20 HP (18.64 KW)	2620 x 1330 mm & 6300 x 175 mm	5-40 mpm	5 HP (3.7 KW)	1 HP (0.75KW)	1 HP (0.75 KW)	47 HP (52 KW)	4500 Kg	2000 x 2250 x 2735 mm

HEAVY DUTY LAMINATE SANDING MACHINE

KUMAR
ENGINEERING INDIA PVT. LTD.
AN ISO 9001 : 2015 CERTIFIED COMPANY

MODEL : ZEDLAM 350 HD

High Pressure Laminate Sanding Machine developed keeping in view the need of specific Sanding results of Cleared, Rough Surface with minimum Stock Removal.

The challenge applies to maintain Speed Production, Highest Level of Accuracy, Perfection in continuous Operation. We brought all such Challenges met with our experience, Latest Technology, Perfect Workmanship and using the best available Brands.

We offer lowest Stock Removal, Highest possible Production, Cleared Sanding Results with Lowest Electric Power and Sanding Belt Consumption.

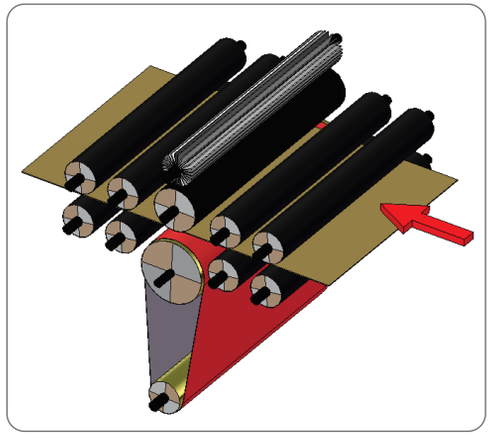

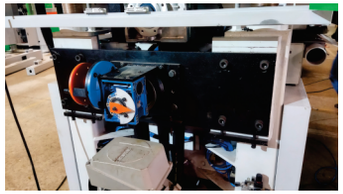

SPECIFICATIONS

Working Thickness	Working Width	No. of Heads	Heads Configuration	Sanding Head	Billy Roller	Feeding Speed	Feed & Exit Motor	Brush Motor	Vertical Motion Motor	Total Power	Weight	Dimensions (W X L X H)
≤ 0.5 mm	200-1250 mm	One	R	Sanding with Steel Roller - 75 HP (55 KW)	Counter Pressure Hard Rubber Roller - 5 HP (3.7 KW)	80 MPM	3 HP (2.2 KW) x 2 Nos.	1 HP (.75 KW)	2 HP (1.5 KW)	86 HP (67.5 KW)	7000 Kg	2840 x 1500 x 2300 mm

KUMAR
ENGINEERING INDIA PVT. LTD.
AN ISO 9001 : 2015 CERTIFIED COMPANY

MODEL : ZEDSWEEP BM

This Machine is used for sanding after dipping. Designed with two pairs of Abrasive Brushes with different grits, for creating coarse sanding through first pair of brushes, and fine-sanding through second pair of brushes. This is featured with both side sanding in one pass.

The Brushing Machine is fully capable to deliver the ultimate result for after dipping Ply sanding without any colour fading.

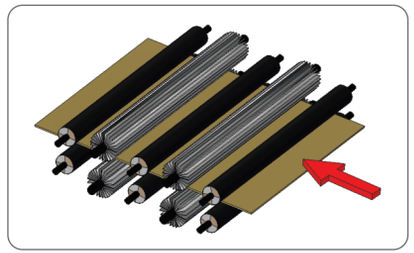

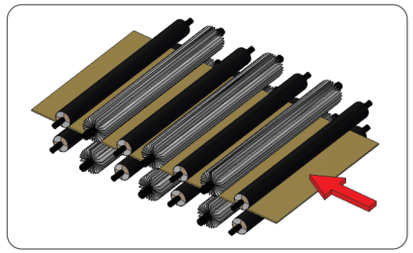

MODEL : ZEDSWEEP TBM

Triple Head Brush Sanding Machine is designed for sanding through brushes for the application of normal / moderate sanding result as brushes can provide just an abrasion sufficient for removal of glue impression but not as good as compared to sanding belt results. This model is best for low / medium cost plywood segment.

SPECIFICATIONS

BM

Working Thickness	Working Width	No. of Heads	Top & Bottom - Head 1	Top & Bottom - Head 2	Top & Bottom - Head 3	Feeding Speed	Feed Motor	Vertical Motion Motor	Pressure Roller Motor	Total Power	Weight	Dimensions (W X L X H)
4-100 mm	200-1250 mm	Four	Brushing with Brush Roller - 5 HP (3.7 KW) x 2 no.	Brushing with Brush Roller - 5 HP (3.7 KW) x 2 no.	NA	5-30 mpm	2 HP (1.5 KW)	1 HP (0.7 KW)	2 HP	25 HP (17 KW)	2200 Kg	1700 x 1800 x 1950 mm

TBM

4-100 mm	200-1250 mm	Six	Brushing with Brush Roller - 5 HP (3.7 KW) x 2 no.	Brushing with Brush Roller - 5 HP (3.7 KW) x 2 no.	Brushing with Brush Roller - 5 HP (3.7 KW) x 2 no.	5-30 mpm	3 HP (2.2 KW)	1 HP (0.7 KW)	34 HP (25.5 KW)	2900 Kg	2100 x 1800 x 1950 mm	

KUMAR
ENGINEERING INDIA PVT. LTD.
AN ISO 9001 : 2015 CERTIFIED COMPANY

MODEL : ZEDSAW 2490 HS

Automatic Edge Cutting Machine, or DD Saw, is another venture of our company in the pursuit of the goal of technical innovation. Being an entirely automatic machine, it is fully capable to bring down time, energy and manpower exponentially.

Working features of this machine are as follows-

- Plywood is to be loaded only at the input side. It will further be carried away to the output side through dynamic design and hi-tech automation.
- The plywood is tightly held through pneumatic clamps.
- Longitudinal table carries the plywood through extra high speed cutter, having 6000 RPM speed, built exclusively by Kumar Engineering Co.
- After cutting it width-wise, the plywood is moved to the right angle of its initial motion, and then, high speed length-wise cutting starts.
- Finally, the bunch of sheets is auto stacked on the scissor lift.

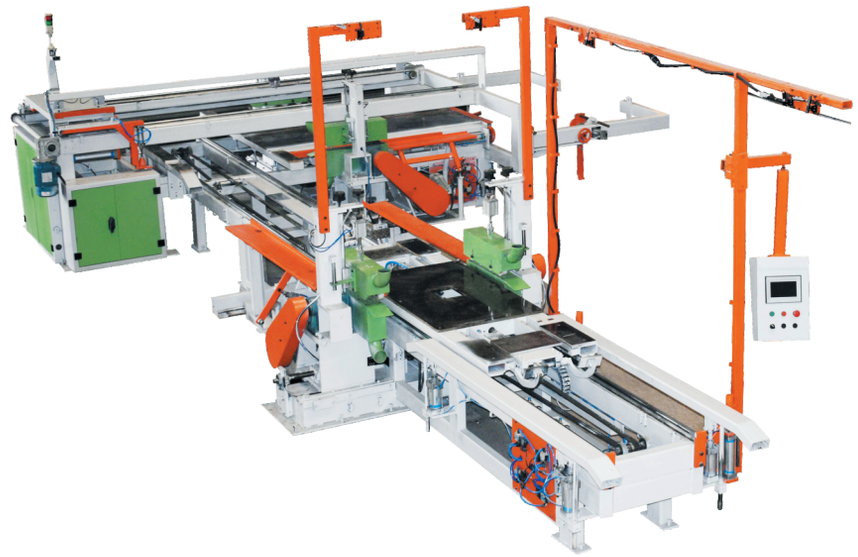

SPECIFICATIONS

Longitudinal Saw Motor	Short Saw Motor	Propulsion Power	Scoring Cutter Power	Cutter Speed	Working Size Range (Width - Wise)	Working Size Range (Length - Wise)	Size Setting Power	No. of Size Setting Laser	Heavy Duty (Range of Stroke)	Hydraulic (Capacity)	Lifting Table (Power)	Stack Frame At Exit	Total Power	Installation Size (W X L X H)
15 HP (11 KW) x 2 No.	15 HP (11 KW) x 2 No.	3 HP (2.2 KW) x 2 No. Servo Motors	1 HP X 2 No.	6000 RPM	600 to 1300 mm	1500 to 2500 mm	1.3 HP (1 KW) x 2 No. Servo Motors	4, with 400W Servo Motor	1500 mm	4 Tonne	5 HP (3.7 KW)	Pneumatic	75 HP (56 KW)	6000 X 5000 X 1500 mm

KUMAR
ENGINEERING INDIA PVT. LTD.
AN ISO 9001 : 2015 CERTIFIED COMPANY

MODEL : ZED PS-5H

Profile Sanding Machine is usable for buffing the grooved surface of Doors, Table Tops, different Furniture Parts.

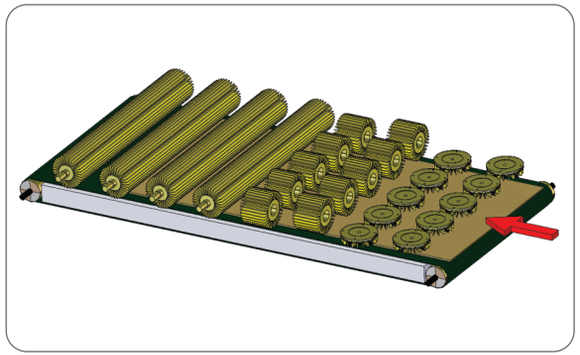

Brushes in different pattern are mounted in different heads and also rotates in longitudinal & circular directions. Apart from rotations the oscillation of heads are also taken into design for achieving the desired results.

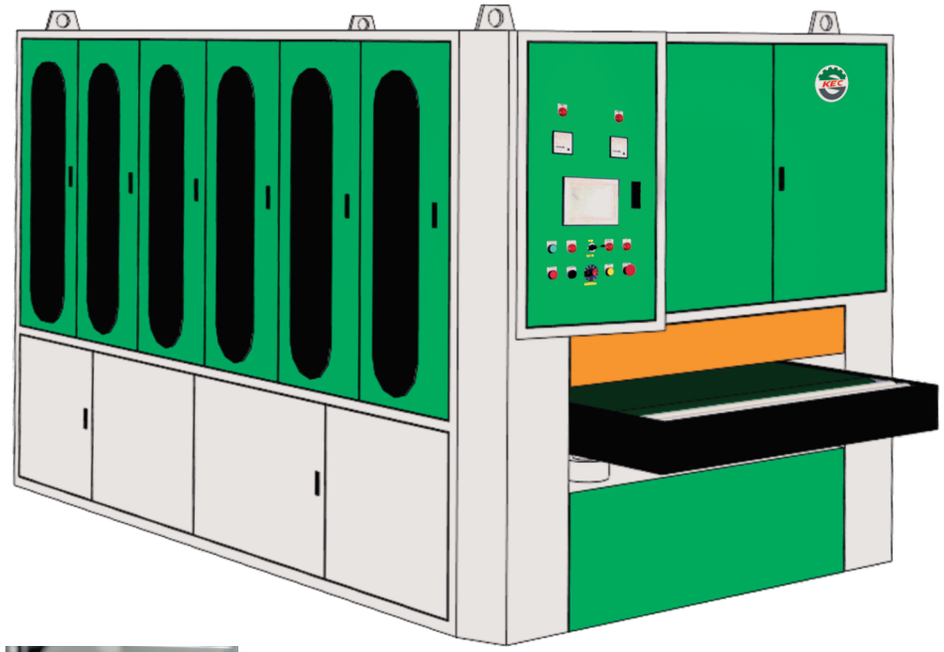

The Machine is generally designed with Six Heads Configurational but can be made with as many Heads as need of the particular application.

SPECIFICATIONS

Working Thickness	Working Width	No. of Heads	Ist Head (Brush Roller)	IInd Head (Brush Roller)	IIIrd Head (Brush Roller)	IVth Head (Brush Roller)	Vth Head (Brush Roller)	Vith Head (Brush Roller)	Feeding Speed	Feed Motor	Vertical Motion Motor	Total Power	Weight	Dimensions (W X L X H)
6-120 mm	200-1250 mm	Six	Brushing with Brush Roller - 5 HP (3.7 KW)	Brushing with Brush Roller - 5 HP (3.7 KW)	Brushing with Brush Roller - 2 HP (1.5 KW)	Brushing with Brush Roller - 2 HP (1.5 KW)	Brushing with Brush Roller - 2 HP (1.5 KW)	Brushing with Brush Roller - 2 HP (1.5 KW)	5-30 mpm	3 HP (2.2 KW)	1 HP (0.7 KW)	22 HP (16.5 KW)	2900 Kg	4200 x 2050 x 1900 mm

KUMAR ENGINEERING INDIA PVT. LTD.
AN ISO 9001 : 2015 CERTIFIED COMPANY

MODEL : ZEDSAN CCM

Core veneer composer is a machine which joins the veneer together with speed and accuracy for the manufacturing of quality plywood.

Core composing is done by composing core with five layers thread which helps to join the core with utmost strength and make it streamline in different required standard size for making plywood in different specifications.

The core composer makes single core sheet of 8x4 or desired specifications by joining or stitching all dried core inserted into it.

Advantages -

1) Reduce wastage of core, thread and glue as compared to other machines and manual practices.
2) Due to our Advance technology and Designing, the Core Composing machine is able to give best quality sheets without leaving any gaps or overlapping each other.
3) Fully automated to make the machine more user-friendly and easy to operate with less man power.

SPECIFICATIONS

Drive Type	Structure	Thickness	Jointing Direction	Working Efficiency	Covered Area	Knife Length	Glue Groove Heat	AC	Glue Point (Nose) Number	Thread (Yarn) Number	Core Veneer Adjustment Speed Adjustment	4x4 ft 4x8 ft 3x6 ft Change	Dimensions (W X L X H)
Servo	Whole Steel Plate Laser Cutting	1.2-3.6 mm	Horizamtal	260-300 pcs/h (finished Jointing Veneer)	11 M^2	1400 mm	9 KW	700W / 1Set	7	7	Yes	Yes	3600 x 2600 x 2500 mm

KUMAR
ENGINEERING INDIA PVT. LTD.
AN ISO 9001 : 2015 CERTIFIED COMPANY

MODEL : ZED-PNGS-8FT

Glue Spreader is used for spreading glue Uniformly on veneers. Uniform gluing with the exact figure of adhesives improves the quality of plywood and saves a huge amount of expense in the long run.

Our Rubber rollers are made by the high quality natural rubber, the squeeze roller is chromate treatment seamless which helps in increasing the utilization of glue and decreasing and minimize glue consumption.

The gap between the rollers can be freely adjusted and locked by hand-wheels.

The glue spreading quantity can be regulated by pneumatically.

SPECIFICATIONS

Main EPDM Rubber Rolls	Doctor Rolls	Clearance Between Rubber Rolls	Adjustment of Doctor Rolls	Feed Speed Stepless Invert	Transfer Speed	Motor for Outfeed Conveyor	Motor for Main Roller Drives	Machine Weight Approx
400 mm Dia x 2700 mm Length x 2 Sets	240 mm Dia x 2700 mm Length x 2 Sets	0-70 by handle	By Pneumatic & Fine adjustment by handle	0-120 Hz	0-35M / Minute (Adjustable)	1.5 Kw	7.5 KW	5500 Kgs

KUMAR
ENGINEERING INDIA PVT. LTD.
AN ISO 9001 : 2015 CERTIFIED COMPANY

Paving Line

TECHNICAL SPECIFICATIONS	
Conveyor Belt with Speed Control	2 - 20 MPM
Vertical Conveyor	150 mm
Digital Controlled length Cutting System	Max 1350 mm
Motorised Conveyor upto Scissor Lift	5 HP on Slide Rail
Scissor Lift with Auto Adjustment	5HP (6 Ton Capacity)
Vaccum Auto Loading System	6 Cups Vacuum Diaphragms
Motorised Conveyor Roller	Length as per requirement
Length & Hight of Comoposing Compare	104'ft & Width 1310 mm
Height	600 mm

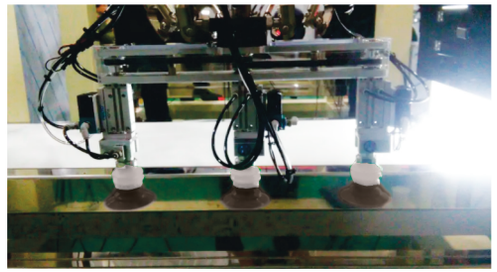

Auto Loading & Stacking System

TECHNICAL SPECIFICATIONS	
Structure Construction	Rectangular Pipe
Vacuum Cups	3 Nos. x 250 Dia
Lifting Strength	30 Kg Each Cup
Linear Motion	On Slide Rail
Conveyor Table	6' Long, Speed Synch With Machine
Pick And Lift Speed	Adjustable Through PLC
Moving Speed After Lift	Adjustable Through HMI
Strock of Arm	Twice (Adjustable Through PLC)

Hydraulic Scissor Lift

TECHNICAL SPECIFICATIONS	
Table Size	1000 x 2000 mm
Lifting Capacity	Above 3 Ton
Closed Height	500 mm
Opened Height	1700 mm
Cylinder Dia	150 mm
Power Pack	5 HP (3.7 KW)

MACHINES AT A GLANCE

KUMAR
ENGINEERING INDIA PVT. LTD.
AN ISO 9001 : 2015 CERTIFIED COMPANY

Specifications \ Machine Type			DOUBLE HEAD WIDE BELT SANDING MACHINE - TOP	DOUBLE HEAD WIDE BELT SANDING MACHINE - BOTTOM	HEAVY DUTY BOTH SIDE SANDING MACHINE	TRIPLE HEAD CALIBRATING AND SANDING MACHINE	HEAVY DUTY LAMINATE SANDING MACHINE	HEAVY DUTY BOTH SIDE CALIBRATING MACHINE	SINGLE COMBI HEAD SANDING MACHINE	SINGLE HEAD CALIBRATING MACHINE	DOUBLE HEAD BOTH SIDE BRUSHING MACHINE	HARDWOOD CALIBRATING & SANDING MACHINE
			ZEDSAN 4126 DS	ZEDSAN 4126 BS	ZEDSAN 3426 TBS	ZEDSAN 5326 TCS	ZEDLAM 350 HD	ZED-HDC-350	ZEDSAN 3426 CS	ZEDSAN CAL 290	ZEDSWEEP BM	ZEDWOOD 1050
WORKING THICKNESS (mm)			2-100	2-100	2-200	2-100	0.4-50.0	4-100	2-100	2-100	4-100	6-125
WORKING WIDTH (mm)			200-1250	200-1250	200-1250	200-1250	200-1250	200-1250	200-1250	200-1250	200-1250	150-1000
NO. OF HEADS			TWO	TWO	FOUR	THREE	ONE	TWO	ONE	ONE	FOUR	TWO
HEADS CONFIGURATION			R-R/P	R-R/P	R-R/P : R-R/P	R-R-R/P	R	R : R	R/P	R	NA	CUTTER - R/P
TOP	H1	PURPOSE	Sanding	NA	Sanding	Calibration	Calibration	Calibration	Sanding+Polishing	Calibration	Brushing	Cutting
		UNIT	Rubber Roller		Rubber Roller	Steel Roller	Steel Roller	Steel Roller	Sanding Pad	Steel Roller	Brush Roller	Cutter Roller
		MOTOR (HP)	25 (18.64 KW)		25 (18.64 KW)	50 (37 KW)	75 (55 KW)	75 (55 KW)	25 (18.64 KW)	50 (37 KW)	5 (3.7 KW)	10 (7.5 KW)
	H2	PURPOSE	Polishing	NA	Polishing	Sanding	NA	NA	NA	NA	Brushing	Sanding+Polishing
		UNIT	Sanding Pad		Sanding Pad	Rubber Roller					Brush Roller	Sanding Pad
		MOTOR (HP)	20 (15 KW)		20 (15 KW)	25 (18.64 KW)					5 (3.7 KW)	10 (7.5 KW)
	H3	PURPOSE	NA	NA	NA	Polishing	NA	NA	NA	NA	NA	NA
		UNIT				Sanding Pad						
		MOTOR (HP)				20 (15 KW)						
BOTTOM	H1	PURPOSE	NA	Sanding	Sanding	NA	NA	Calibration	NA	NA	Brushing	NA
		UNIT		Rubber Roller	Rubber Roller			Steel Roller			Brush Roller	
		MOTOR (HP)		25 (18.64 KW)	25 (18.64 KW)			75 (55 KW)			5 (3.7 KW)	
	H2	PURPOSE	NA	Polishing	Polishing	NA	NA	NA	NA	NA	Brushing	NA
		UNIT		Sanding Pad	Sanding Pad						Brush Roller	
		MOTOR (HP)		20 (15 KW)	20 (15 KW)						5 (3.7 KW)	
BELT SIZE (in mm)			2620 X 1350	2620 X 1350	2620 X 1350	2620 X 1350	NA	2620 X 1350	2620 X 1350	2620 X 1350	NA	1900 X 1050
SANDING BELT SPEED			5-40	5-40	5-40	Calibration : 5-30 Sanding : 5-40	10-80	5-30	5-40	5-30	5-30	5-40
			5 HP (3.7 KW)	5 (3.7 KW)	3 (2.2 KW) X 2 no.	5 (3.7 KW)	2 (1.5 KW)	5 (3.7 KW)	3 (2.2 KW)	5 (3.7 KW)	2 (1.5 KW)	2 (1.5 KW)
BRUSH MOTOR (HP)			1 (0.75 KW)	NA	NA	1 (0.75KW)	1 (0.75 KW)	NA	1 (0.75 KW)	1 (0.75 KW)	NA	NA
OTHER MOTOR (HP)			Vacuum Blower Motor (Optional)	Vacuum Blower Motor	Vacuum Blower Motor	Vacuum Blower Motor (Optional)	Pressure Roller Motor	Pressure Roller Motor	Vacuum Blower Motor (Optional)	NA	Pressure Roller Motor	NA
			3 (2.2 KW)	5 (3.7 KW)	5 (3.7 KW)	3 (2.2 KW)	5 (3.7 KW)	5 (3.7 KW)	2 (1.5 KW)		2 (1.5 KW)	
VERTICAL MOTION MOTOR (HP)			0.5 (0.37 KW)	2 (1.5 KW)	2 (1.5 KW)	1 (0.75 KW)	2 (1.5 KW)	3 (2.2 KW)	0.5 (0.37 KW)	0.5 (0.37 KW)	1 (0.7 KW)	0.5 (0.37 KW)
TOTAL POWER (HP)			54.5 (40.6 KW)	57 (42.5 KW)	103 (76.8 KW)	105 (78 KW)	70 (52.2 KW)	133 (99 KW)	31.5 (23.5 KW)	56.5 (42 KW)	25 (18.6 KW)	22.5 (16.77 KW)
WEIGHT (Kg)			3950	4200	9500	5700	6200	9500	2500	3000	2200	2500
DIMENSIONS		WIDTH (mm)	2240	2250	3350	2240	2840	2440	2240	2240	1700	1840
		LENGTH (mm)	2500	2100	2250	3100	1500	1500	2150	2150	1800	1850
		HEIGHT (mm)	2300	2600	2700	2300	2300	2850	2200	2300	1950	1850

OUR PRESTIGIOUS CLIENTS

KUMAR
ENGINEERING INDIA PVT. LTD.
AN ISO 9001 : 2015 CERTIFIED COMPANY

Greenply
CENTURY PLY
merino — ECONOMY • EXCELLENCE • ETHICS
gl — Relation forever!
VIRGO LAMINATES
ADVANCE
DURO — BLOCK BOARD • PLYWOOD • VENEERS • DOORS
AUSTIN PLYWOOD PVT. LTD. — AUSTIN PLYWOOD — KOLKATA
Kitply — Ply Mane Kitply
SAMRAT — PLY | MICA | CLADDING — Inspired by Nature
Gattani Ply
Signature — It's not just a laminate
SABURI PLYWOOD
OSWIN PLY — Assurance & Endurance
MANILAM — DECORATIVE PANEL
TIMEX — PLYWOOD & DOORS — architectural ideas personified !
Metrogroup
E3 GROUP
Bhutan tuff — Bringing Home The Nature — PLY | VENEER | DOORS
GMG PLYWOODS
evergreen — Plywood Industry
The Plywood People — New Pragati Plywood Industries Yamunanagar
EVEREST PLY — BEST PLY FOREVER
CENTRAL INDIA VENEERS PVT. LTD.
safedecor
flamingo — range of ply products
NEPCAM — LAMINATES
OSWAL PLYWOOD
TOUGHWOOD
AGNI — THE 'ACTION-PACKED' PLY
Goenka INC
splice — DESIGNER DOOR | LAM | PLY — Hai mazboot, rahe atoot !
SAI BABA — Wood Products Pvt. Ltd.
EURO PLY — EURO PLY
JAGDAMBA — Wood Industries
MWP
RP — PLYWOOD, BLOCKBOARD & FLUSHDOOR
RAJDHANI CRAFTS — RC — Redefining Lifestyle
BULAND PLY — MAJBOOT HAMESHA
KPI PLY — A Premium Quality Product — KESHAV PLYWOOD INDUSTRIES (P) LTD.

KUMAR
ENGINEERING INDIA PVT. LTD.
AN ISO 9001 : 2015 CERTIFIED COMPANY

24/7 HOURS SERVICE

Please call us at
88262 98005

H. O. / Factory Address :

Khatri Industrial Area, Sampla-Beri Road, Sampla - 124501, Distt. Rohtak, Haryana (INDIA)
Mob. No.: +91 9811119274, 8222931401, 9899029274, 8222931402 | E-mail : marketing@kumarengineeringco.in

Branch Offices :

1935, 3rd Floor,
Fountain Electric Market,
Bhagirath Palace, Chandni Chowk,
Delhi - 110006 (INDIA)
Mob.: +91 8222931425

G-2, Pandit Apartment,
Kamboj Colony, Jagadhri,
Yamunanagar - 135003
Haryana (INDIA)
Mob.: +91 8222931406

Menachary Arcade
PO - Allapra Distt. Eranakulam
Perumbavoor - 683556
Kerala (INDIA)
Mob. No.: +91-8222931422

22, Mansarovar Complex,
Delhi Road, Moradabad - 244001
U.P (INDIA)
Mob.: +91 9837202785

CE

KUMAR
ENGINEERING INDIA PVT. LTD.
AN ISO 9001 : 2015 CERTIFIED COMPANY

"EXTRA ORDINARY EXPECTATIONS MET WITH ABSOLUTE SATISFACTION"